PERGAMON

Engineering Applications of Artificial Intelligence 13 (2000) 451–458

Engineering Applications of
ARTIFICIAL INTELLIGENCE

www.elsevier.com/locate/engappai

A neuro-fuzzy tool for CT-PT contact detection in a pressurized heavy water reactor

A. Mukherjee[a,*], K. Shivaprasad[a], R.I.K. Moorthy[b], A. Kakodkar[c]

[a]*Civil Engineering Department, Indian Institute of Technology, Mumbai 400 076, India*
[b]*Vibration Laboratories, Reactor Engineering Division, Bhabha Atomic Research Centre, Mumbai 400 076, India*
[c]*Bhabha Atomic Research Centre, Mumbai 400 076, India*

Received 1 July 1998; accepted 8 September 1999

Abstract

In a pressurized heavy water reactor (PHWR), contact between the calandria tube (CT) and the pressure tube (PT) makes them susceptible to delayed hydrogen cracking. Periodic inspection of the channels must be carried out to detect such contacts. As the number of channels in a PHWR is very large (306 in a 230 MW plant) periodic in-service inspection of all the channels leads to an unacceptable downtime. A non-intrusive technique that employs a system-identification method is presently used for contact detection. Attempts to identify all the contacting channels, without missing any, lead to overprediction of the number of channels in contact; i.e., many channels are diagnosed as contacting, while those channels are actually not in contact. This puts a large number of healthy channels in the at-risk list, reducing the efficacy of the method. Previously, the authors demonstrated the power of a neural post-processor in improving the strike rate of the system-identification tool. This paper demonstrates a stand-alone neuro-fuzzy tool for the detection of CT–PT contact. The network consists of a cascade of self-organizing artificial neural networks (ANNs), along with fuzzy processors. The performance of the network has been compared with that of the system-identification techniques. The noise tolerance of the network is also demonstrated.

Keywords: Artificial neural network; Neuro-Fuzzy tools; Pressurized heavy water reactor; CT-PT contact; Noise tolerance

1. Introduction

The basic building blocks of a pressurized heavy water reactor (PHWR) are the pressurized coolant channels. Each coolant channel consists of a pressure tube (PT) that contains the fuel and hot pressurized coolant (Fig. 1). The pressure tube passes through another tube, called the calandria tube (CT) with garter spring spacers that maintain the annular insulation gap. A number of such pressure tube–calandria tube assemblies immersed in a tank of low pressure and low temperature moderator forms the reactor.

In many channels the garter springs that maintain the gap between PT and CT of PHWR can get significantly displaced from their designed position. Moreover, the large unsupported span of the PT restricts the life of the channel due to premature contact between the PT and the CT, making it susceptible to delayed hydrogen cracking.

The conventional techniques for channel inspection call for an extended shutdown of the reactor and a complete unloading of the channels. The total time and effort involved in such measurements preclude the inspection of all the 306 channels of a 235 MW reactor in a single shutdown. To circumvent the unacceptable downtime and cost of inspection, researchers have attempted different diagnostic techniques. The problem demands a technique that is able to maintain a high *strike rate* (i.e., the ratio of number of channels actu-

* Corresponding author. Tel.: +91-22-576-7343; fax: +91-22-576-7302.
E-mail address: abhijit@civil.iitb.ernet.in (A. Mukherjee).

0952-1976/00/$ - see front matter
PII: S0952-1976(00)00024-5

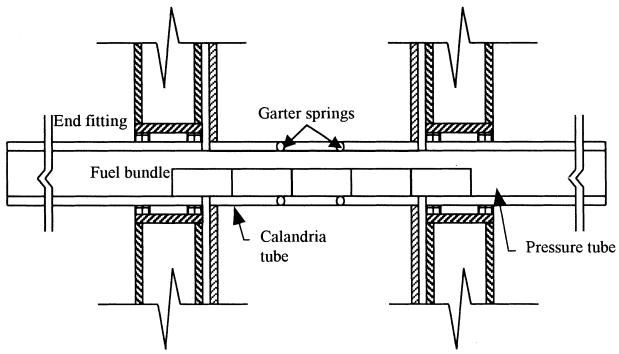

Fig. 1. Coolant Channel of PHWR.

ally in contact to the number of suspected ones) without missing any offending channel. The techniques of structural mechanics, however, are not directly available for contact detection. The tools of structural mechanics are efficient in predicting the response of the structure due to an excitation. It is, however, difficult to reconstruct the structure from known loads and response. Such problems are called "inverse problems", and they are traditional weak points of structural mechanics. The system-identification techniques are useful for handling such problems.

In the case of a CT–PT contact, the vibrational signature of the structure changes significantly due to the contact. Paz et al. (1991) have reported experimental transfer functions of the contacting and the non-contacting channels, and observed that substantial attenuation takes place at lower modes as a result of contact. Moorthy et al. (1995) have in their theoretical analysis observed the same phenomenon. Fig. 2 shows the difference in pattern of a contacting channel vis-à-vis a non-contacting one. The difference in pattern can be used as the discriminating feature for the identification of the contacting channels.

To record the dynamic response, a time-varying excitation is necessary. In one method, the excitation to the channels is applied externally. Alternatively, the ambient vibration due to the coolant flow can be recorded. In both the excitation methods the strike rate of the existing technique is not good enough to bring the number of suspected channels to a level that it is possible to inspect during the regular shutdown period (≈ 30 days/year). Therefore, a technique that can improve the strike rate further should considerably improve the productivity of the reactor.

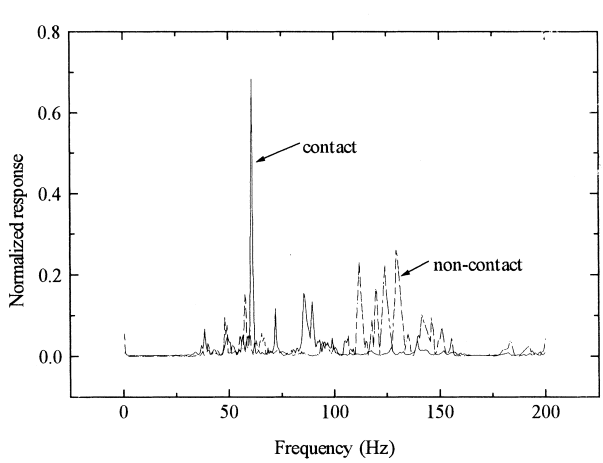

Fig. 2. Dynamic response of contacting and non-contacting channels.

The dynamic response patterns of contacting and non-contacting channels shown in Fig. 2 are *ideal*. Often the distinctions are not so clear, thus making it difficult for the human experts to identify the contacting channels. Of late, artificial neural networks (ANNs) have been employed to tackle a variety of pattern-recognition problems, such as human face recognition, natural language understanding, speech recognition, etc. In structural engineering, ANNs have successfully diagnosed damage (Wu et al., 1992), identified mode shapes (Mukherjee, 1997), predicted material behavior (Mukherjee et al., 1995; Mukherjee and Nag Biswas, 1997) and designed structures (Mukherjee and Deshpande, 1995), along with a variety of other pattern-recognition tasks. The contact-detection problem is a problem of matching patterns. Therefore, the problem of detecting contact in a member, and its extent, is well within the scope of an ANN. Moreover, the structural response measured at the field contains various levels of noise. Therefore, noise tolerance is a highly desirable property in the tools for the detection of damage. Some ANN architectures have proved to be noise-tolerant. This property could be very useful in the detection of contact.

Recently, Mukherjee et al. (1998) have reported the first attempt to employ the ANN in CT–PT contact detection. The main aim was to improve the strike rate of the existing detection tools by attaching a neural post-processor. It was mentioned above that when the tubes diagnosed as contacting by the existing tools, were inspected, only a small number of the were actually found to be in contact. In the previous investigation, an attempt was made to improve the strike rate by adding a neural post-processor to the existing system-identification tool. For this purpose the results of site inspections of tubes (that have been diagnosed as contacting by the existing techniques) have been utilized in training a counterpropagation neural network. This network was successful in dramatically increasing the strike rate. The noise tolerance of the network was also demonstrated. However, the network depended on the results of the system-identification tool. These system-identification tools are not entirely automatic, and they require processing by *experts* to arrive at a conclusion. Consequently, the results of the diagnostic tool cannot be obtained immediately after the on-site

measurements. This paper demonstrates an ANN that is fully automatic and independent of any other tools or expert's interpretation. As a result, the conclusions about the condition of the tubes can be made immediately after the on-site measurements.

From a wider perspective, the present tool can be applied to the detection of contact in facilities that have concentric tubes, such as heat exchangers. The methodology described here is applicable to any classification problem where one cascades through different manifestations of varying accuracy and reliability to arrive at a conclusion.

2. Data acquisition

In the contact-detection problem, the first step is the acquisition of data. In the present work, the dynamic responses of tubes have been used. The scheme consists of a shaker, and instrumentation to measure the response. The test consists of giving excitation around each mode, as well as a broad-band excitation from 5 Hz to 200 Hz to cover many modes. The excitations were applied by sine sweeps, as well as multisine modes. Based on different trials, it was observed that a broad-band multisine excitation in the band of 5 Hz to 200 Hz could significantly improve the discrimination. To remove the effects of noise, coherence between the input and output signals was obtained and the coherent portion of power spectrum, called the coherent output power (COP), is considered for analysis.

For an accurate response, the measurements have to be carried out in the interiors of the tubes. However, this leads to unacceptable downtime, and the cost of such an inspection is also very high. Alternatively, a *non-intrusive* technique can be adopted, where the measurements are taken at the exposed end fittings of the tubes. In the present investigation the *non-intrusive* technique is adopted (i.e., the responses of the tubes have been measured at the end fittings only). As the end fittings are very close to the supports (Fig. 1) the amplitude of vibration is very low. Therefore, there is more likelihood of the data being noisy. Moreover, the instrumentation to measure the response had to be located on the other exposed end of the tube. As a result, the measurement is susceptible to instrumentation and structural noise. To overcome this drawback, the data was processed through standard noise filters. However, it was felt that the residual noise in the filtered data was responsible for the poor strike rate of the conventional system-identification techniques. ANNs have the ability to work with noisy data. Therefore, the resulting data was used as the input to the neural network for the detection of contacting tubes.

The COP spectra for 300 tubes of a nuclear power plant were developed for a frequency range of 0.5–200 Hz with a resolution of 0.5 Hz. Conventional detection techniques were used in identifying the suspect channels. Subsequently, on-site inspection was carried out to examine the contacts in the channels. The results of the on-site inspection show that conventional techniques tend to over-predict the number of at-risk tubes. The basis used for the classification of the tubes is now briefly discussed below.

3. Classification criteria

There are two zones of interest in the COPs, that can be used for classification — the *first peak method* (FP) *and the contact index method* (CI). The first major peak in the COP is obtained in the 6–9 Hz zone. This area corresponds to the first natural frequency of the tubes. Contact results in a deviation in this peak. Therefore, contact status can be determined by looking for a peak in the 6-9 Hz zone (FP method). This method is extremely dependable, and it does not miss any contacting channels. Although this technique does not fail to indicate the contacting channels, the response at the first mode gets altered for a variety of other reasons. Therefore, the strike rate of the technique is not satisfactory. To increase the strike rate of the detection tool one must look for a more clearly differentiated feature that points at contact.

The response of contacting channels gets banded towards the middle frequency range. The bandedness is estimated by the fraction of the power concentrated in a defined band (50 Hz band in the range of 20 Hz–100 Hz) as a fraction of the total power. Moorthy et al. (1995) defined this ratio as the *contact index* (CI). A higher value of the CI indicates a greater chance of contact. This technique has a higher strike rate. However, there have been instances of failure of this method, so this method cannot be used alone.

Of the CI and FP techniques, FP measurements are less prone to errors due to background noise. Due to higher confidence in the FP measurements, this could be used as the primary screening criterion to short-list the contacting channels. For example, Moorthy et al. (1995) observed that out of 600 channels that have been tested by using the FP technique, 226 channels, showed FP deviation. Of these 226 channels, 58 were inspected, of which 15 were found to be contacting.

Although FP measurements are more reliable, the feature extracted for contact is not unique, and the fraction of contacting channels is still small. Therefore, to discriminate better between the contacting and non-contacting channels, the CI technique has been used on the channels that are short-listed by the FP technique. Out of the 226 channels that exhibited FP deviation, 58 channels showed a CI of more than 0.7, while only 7 of these were actually in contact. The

strike rate of the CI technique is still not satisfactory. The next section of the paper demonstrates an artificial neural network (ANN) used for the same problem.

4. Present ANN

The schematic diagram of the ANN is presented in Fig. 3. The network is a combination of self-organizing networks and fuzzy processors. It was mentioned earlier that the FP method is suitable for short-listing at-risk tubes. The first component of the ANN performs this task. The input to the network is COP in the 4–11 Hz range. The network looks for the missing peak, and sifts the at-risk tubes from the healthy ones. The COPs of the suspect tubes are then cascaded in the CI network to achieve a better strike rate. The CI network has a fuzzy pre-processor that compresses the input data and filters the noise. The compressed data are then fed to the classifying network, as discussed below.

4.1. FP network

The FP network is based on Kohonen's (1988) self-organizing feature map (Fig. 4). The neurons in layer 1 (shown as circles) serve only as fan-out points, and perform no computation. Each layer-1 neuron connects to every neuron in layer 2 (called the Kohonen layer) through a separate weight w_{mn}. These are collectively referred to as the weight matrix w. The input vector x comprises input signals $x_1, x_2, x_3, \ldots, x_m$ The NET output of each Kohonen neuron is simply the summation product of the normalized weight vector and the normalized input vector.

$$\mathrm{NET}_j = \sum \tilde{x}_i \cdot \tilde{w}_{ij} \tag{1}$$

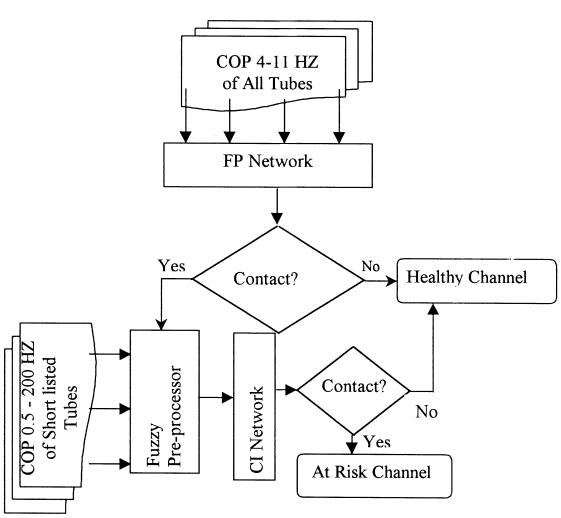

Fig. 3. Flow diagram of the detection tool.

where, NET_j is the NET output of the Kohonen neuron j.

The Kohonen layer functions in a *winner-take-all* fashion; that is, for a given input vector only one Kohonen neuron outputs a logical "one"; all the others output a zero. The Kohonen neuron with the largest NET value is the winner. Its output is set to one; all the others are set to zero.

The Kohonen layer classifies the input vectors into groups that are similar. This is accomplished by adjusting the Kohonen layer weights in such a manner that similar input vectors activate the same Kohonen neuron. Kohonen training is a self-organizing algorithm that operates in unsupervised mode. The training equation is as follows:

$$w_{\mathrm{new}} = w_{\mathrm{old}} + \alpha(x - w_{\mathrm{old}}) \tag{2}$$

where w_{new} is the new value of a weight connecting an input component x to the winning neuron; w_{old} is the previous value of this weight; α is a training rate coefficient that may vary during the training process.

The value of α varies from 0 to 1, and controls the rate of learning. α equal to 1 means that the network learns a new example as soon as it is presented. The network, however, forgets all previous examples of that class. Similarly, α equal to 0 means that the network does not learn at all, and it classifies new examples on the basis of previous experiences only. Initially α is set to a value close to 1, and it is gradually reduced as training progresses.

The input for the present network is a COP between 4 and 11 Hz with a step of 0.5 Hz. Therefore, there were 15 input nodes. The COP values of 300 tubes, collected from the nuclear power plant, have been used as input. The tubes have been divided into two groups of 150 each. The tubes that have been found after inspection to be in contact were represented equally in the two groups. One group was used in training, while the other group was used as *new* problems for examin-

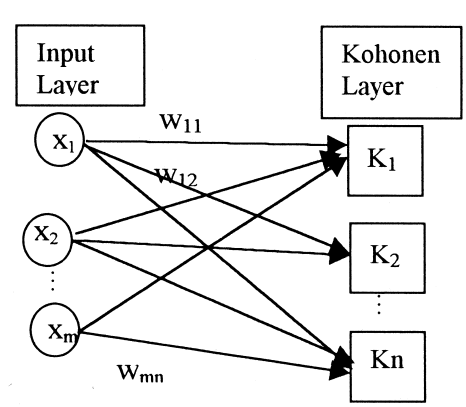

Fig. 4. Architecture of the FP network.

ing the network. The network's training is successful when it is able to classify the *new* problems correctly.

The resolution of classifications in a Kohonen network depends on the number of Kohonen nodes used. While too few nodes may group dissimilar patterns into the same class, too many nodes may result in too fine a distinction of patterns, and loose generalization. The number of Kohonen nodes was decided here by successive trials, followed by an evaluation of their performance. It was found that with seven Kohonen nodes, the network performed well. The network short-listed 77 out of 300 channels as suspect. The list included all the tubes that were found to be in contact during inspection; i.e., the network did not *miss* any contacting tubes.

The weight matrix w of the network shows the main patterns corresponding to each Kohonen node. The patterns corresponding to the seven Kohonen nodes are presented in Fig. 5. Patterns 1, 2, 3, and 4 show deviation in first peak, indicating possible contact, and the remaining three patterns show no FP deviation, indicating healthy tubes.

The channels that are *cleared* by the FP network are declared healthy, and are excluded from the detection process. To improve the strike rate, the channels that are diagnosed as contacting by the FP network are cascaded through the CI network. The structure of the CI network is briefly discussed in Section 4.2.

4.2. CI network

The CI network comprises a fuzzy pre-processor and a counterpropagation network. Unlike the FP network, which observes deviations in the first peak in a limited sector of the data (4–11 Hz), the CI network bases its diagnosis on the bandedness of peaks in the 20–100 Hz range. For this purpose, the complete response data from 0.5 Hz to 200 Hz is presented. A range of 0.5–200 Hz with a resolution of 0.5 Hz produces 400 data points. The data sets are rather large, and some compression of the data is beneficial. A fuzzy pre-processor is used to compress the data, and is also able to *highlight* an important portion of the data. Through data compression the noise tolerance of the network is improved. The fuzzy pre-processor and the counterpropagation network are described next.

4.2.1. Fuzzy preprocessor

Triangular fuzzy functions (Fig. 6) have been used in the present fuzzifier. These are expressed mathematically as

$$f_i(x) = \begin{cases} 0 & \text{if } x < a_1 \\ (x-a_1)/(a_2-a_1) & \text{if } a_1 \le x < a_2 \\ 1 & \text{if } x = a_2 \\ (a_3-x)/(a_3-a_2) & \text{if } a_2 < x \le a_3 \\ 0 & \text{if } x > a_3 \end{cases} \tag{3}$$

The whole range of data is divided into a total of eight fuzzy categories. The fuzzy output for the kth catgory is obtained as follows:

$$I_k = \sum_n x_i * f_i \tag{4}$$

where I_k is fuzzy output, x_i is the ith data ordinate, f_i is the ith fuzzy value.

Through fuzzification, 400 data points have been compressed into eight fuzzy values. Moreover, to highlight the important sector of the data between 30 Hz and 120 Hz, thinner slices have been used. However, the relatively unimportant data at the extremities have been clumped into single categories. The output of the fuzzifier is processed through the counterpropagation network.

4.2.2. Counterpropagation network

A sketch of a typical counterpropagation network is presented in Fig. 7. The network is a combination of

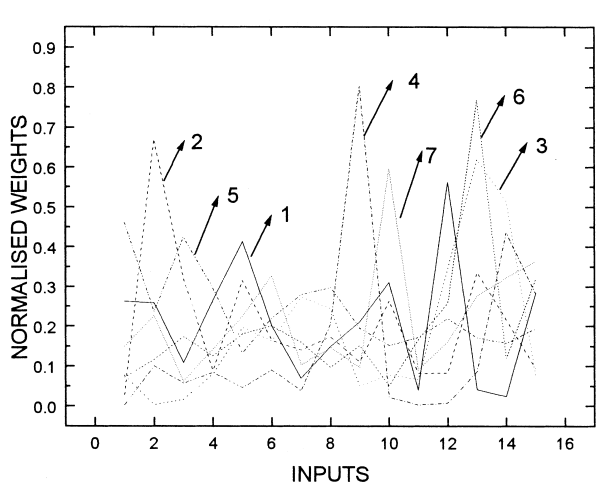

Fig. 5. Patterns in Kohonen nodes of the FP network.

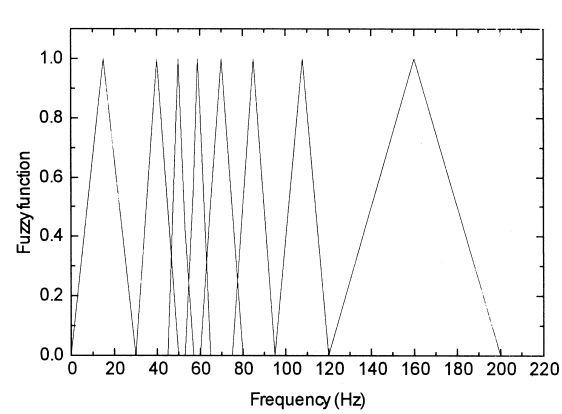

Fig. 6. Fuzzy categories used in the pre-processor.

two well-known algorithms: the self-organizing feature map of Kohonen (1988) and a Grossberg outstar (Hecht-Nielsen, 1987). Together these algorithms possess properties that are not available in either one alone.

The Kohonen layer functions in the same manner as discussed in the FP network. The only major difference between the Kohonen layer in the counterpropagation network and the FP network is that the Kohonen layer in the counterpropagation network allows multiple winners. Instead of applying the winner-take-all strategy, the output of the Kohonen layer ($K_1, \ldots, K_n$) is used as the input of the Grossberg layer. The activation levels of the Kohonen nodes ($K_1, \ldots, K_n$) are obtained by using a Mexican hat neighborhood function. Each neuron in the Kohonen layer (layer 2) connects to every neuron in the Grossberg layer (layer 3) by a weight $\mathbf{v}_{np}$. These comprise the weight matrix $\mathbf{v}$.

The Grossberg layer functions in a similar manner. Its input is the weighted sum of the Kohonen layer outputs $K_1, K_2, \ldots, K_n$ forming the vector $\mathbf{K}$. The connecting weight vector $\mathbf{v}$ consists of the weights $v_{11}, v_{21}, \ldots, v_{np}$. The NET output of each Grossberg neuron is

$$\mathrm{NET}_j = \sum \mathbf{K}_i \cdot \mathbf{v}_{ij} \tag{5}$$

where NET_j is the output of the Grossberg neuron j.

The weight adjustment in the Grossberg layer is proportional to the difference between the weight and the desired output of the Grossberg neuron to which it connects.

$$\mathbf{v}_{\mathrm{new}} = \mathbf{v}_{\mathrm{old}} + (\mathbf{y} - \mathbf{v}_{\mathrm{old}})\mathbf{k}_i \tag{6}$$

where $\mathbf{k}_i$ is the output of Kohonen neuron 1; $\mathbf{y}$ is the vector of desired outputs.

It is clear that the weights on the Grossberg layer converge to the average values of the desired outputs, whereas weights on the Kohonen layer are trained to the average values of the inputs. The unsupervised, self-organizing operation of the Kohonen layer produces outputs at the intermediate positions, and these are mapped to the desired outputs by the Grossberg layer.

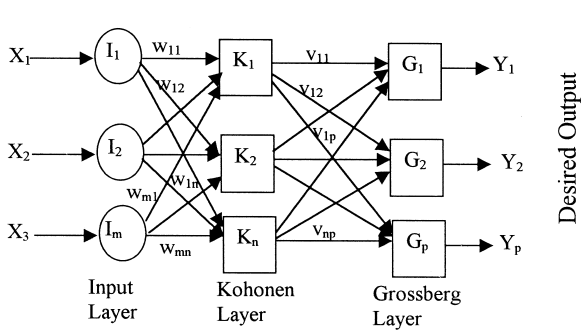

Fig. 7. A counterpropagation network.

The present network has eight input nodes, corresponding to eight fuzzy categories. The Kohonen layer has eight nodes, and the Grossberg outstar has only one node. If the output of the Grossberg layer is 1, the channel is diagnosed as contacting. For a non-contacting channel the output is zero. The weight vectors in the Kohonen layer can be plotted to examine the classification of the network. Fig. 8 presents the weight vectors of the eight Kohonen nodes. Patterns 1, 2 and 3 have peaks around 40 Hz, 50 Hz and 70 Hz, respectively. The channels that peak around this area have a high chance of contact. Patterns 4 and 5 peak outside the zone of interest (20–100 Hz). Other patterns do not have a large peak. Therefore, those classes do not signify contact.

5. Performance of the ANN

The performance of the present ANN in the detection of contact from the measured COP of 304 channels is presented in Fig. 9. Out of 304 channels, 227 were eliminated from the at-risk list by the FP network. The FRF of the remaining 77 channels were diagnosed as at-risk by the FP network, and were submitted to the CI network. The CI network cleared 41 channels, and the remaining 36 channels would require on-site inspection. Out of these 36 channels, 7 were actually in contact. The network must be tested with additional data as soon as new measurements are made at the site.

5.1. Noise tolerance of the network

The detection tool for the present problem uses measured input data, which may contain different

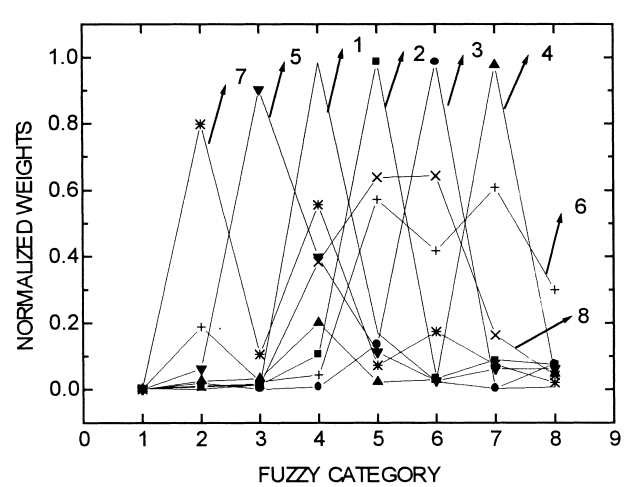

Fig. 8. Kohonen weight vectors in CI network.

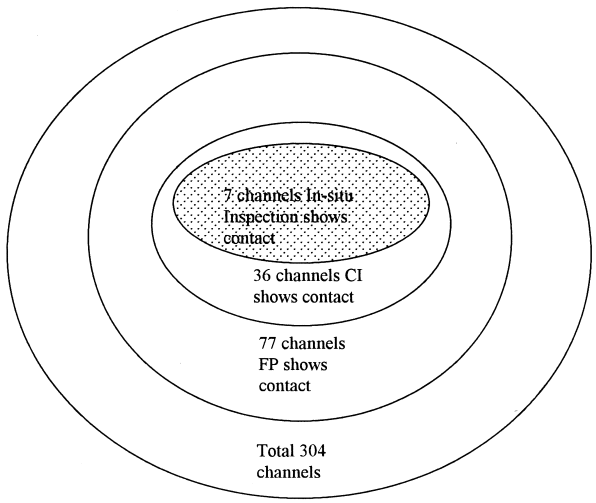

Fig. 9. Channels processed by the different components of the ANN.

levels of noise. Therefore, the detection tool should be able to function with noise present in the data. ANNs are well known for their tolerance to noisy data. This property was tested in the present study and results are reported here.

To examine the noise-tolerance capability of the network, noise was introduced gradually from ±10% to ±30%. To introduce 10% noise the alternate data points were multiplied by 1.1 and 0.9, and then by 0.9 and 1.1. An original sample and noisy data with ±50% noise are presented in Fig. 10. The results with the noisy data have been compared with those from the originally measured data. The number of channels out of the 304 channels that changed category due to the introduction of noise, is shown in Fig. 11. It is observed that although the FP network tends to put a relatively larger number of channels in the at-risk list, the CI network clears the newly added channels. The fuzzy pre-processor of the CI network therefore appears to make the network extremely noise-tolerant. It was observed that with ±10% noise, only one channel was added to the *at-risk* list. The network degraded gracefully as the noise level increased. With ±50% noise, two more channels came to the at-risk list. However, one channel changed from the at-risk category to the non-contact category. It is not hazardous if, due to noise, the tool predicts a few more channels as being at-risk. However, the tool should not *miss* the at-risk channels. At a 50% noise level, one channel from the at-risk list changed its category. Therefore, it can be concluded that the threshold of noise tolerance of the tool is about 50%.

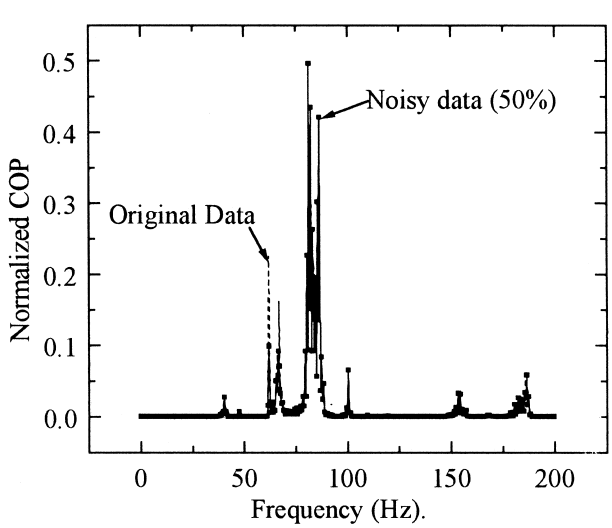

Fig. 10. Noisy and original data.

6. Conclusions

In this paper, the authors have demonstrated a neuro-fuzzy tool for the detection of CT–PT contact in a PHWR. The change in the dynamic response of the channels due to contact is utilized as the distinguishing feature. The ANN tool yields several improvements over the existing system-identification techniques.

- Unlike the existing system-identification tool, the ANN predicts instantaneously.
- The strike rate of the ANN is considerably better.
- The ANN demonstrates excellent noise tolerance.

At present, the network is able to diagnose all the available data. However, the success of the network for all future cases is not guaranteed. The network will be used to diagnose such future cases. It may fail to classify a pattern correctly in cases where the input pattern differs *considerably* from the patterns that have already been stored. The flexible nature of the network allows augmentation with new patterns at any point in

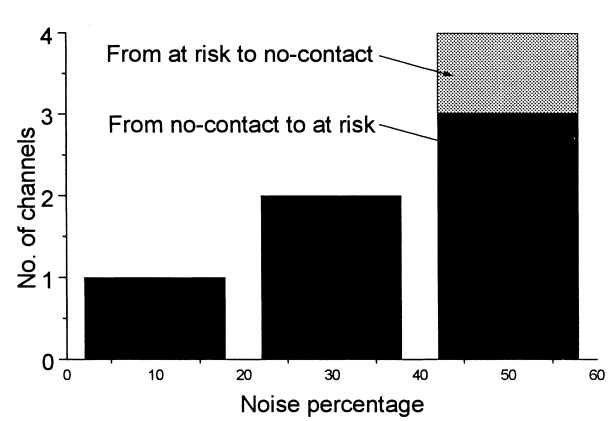

Fig. 11. No. of channels that changed categories due to noise.

time. Such a new pattern can be included in the network by introducing a new node in the Kohonen layer. Thus the network would continue to learn as new data arrive. Plans are in hand to test the ANN with data that are measured in the future.

Finally, although the authors have discussed the problem in the context of the detection of CT–PT contact, the tool could be applied to contact detection in concentric tubes, such as those that are often used in heat exchangers. Moreover, the methodology demonstrated here could be adapted to any pattern-classification problem where one needs to cascade through different symptoms of varying reliability and accuracy, to arrive at a decision.

References

de Paz, A., Peyrano, O.G., Tempestini, M., Germi, R., Koch, R., 1991. Pressure tube–calandria tube contact estimation by means of end fitting vibration analysis, Second Technical Committee Meet. On Safety Operational Experience of Pressurised Heavy Water Reactors, Embalse Argentia, April 3–5, 1991, International Atomic Energy Agency, Candu Owners Group.

Hecht-Nielsen, R., 1987. Counter-propagation networks. Applied Optics 26, 4979–4989.

Kohonen, T., 1988. Self Organising Associative Memory. Springer-Verlag New York, NY.

Moorthy, R.I.K., Sinha, J.K., Rama Rao, A., Sinha, S.K., Kakodkar, A., 1995. Diagnostics of direct CT–PT contact of the coolant channels of PHWRS. Nuclear Engineering and Design 155, 591–596.

Mukherjee, A., Deshpande, J.M., 1995. Modeling initial design process using Artificial Neural Networks. ASCE Journal of Computing in Civil Engineering 9 (5), 194–199.

Mukherjee, A., Schmauder, S., Rühle, M., 1995. Artificial neural networks, for the prediction of mechanical behavior of metal matrix composites. Acta Materialia 43 (11), 4083–4091.

Mukherjee, A., 1997. A self-organizing neural network for the identification of natural modes of multi-storey frames. ASCE Journal of Computing in Civil Engineering 11 (1), 74–77.

Mukherjee, A., Nag Biswas, S., 1997. Artificial neural networks in prediction of mechanical behavior of concrete at high temperature. Nuclear Engineering and Design 178, 1–11.

Mukherjee, A., Raijade, P.R., Moorthy, R.I.K., Kakodkar, A., 1998. Artificial neural networks in CT–PT contact detection in a PHWR. Nuclear Engineering and Design 183, 303–309.

Wu, X., Ghaboussi, J., Garrett, J.H., 1992. Use of neural network in detection of structural damage. Computers and Structures 42 (4), 649–659.